Electrolux PROFESSIONAL

Food Processor TrinityPro Cutter Mixer 3.8 qt - Single Speed - US plug

ITEM #

MODEL #

NAME #

SIS #

AIA #

600999 (K36US)	Cutter Mixer 3.8 qt with stainless steel bowl, 1800 rpm, USA plug

Short Form Specification

Item No.

Table top Cutter Mixer. 3.8 qt., stainless steel bowl with scraper and central feed hole for adding products in mid-cycle. Transparent copolyester lid. Microtoothed blade rotor. Angled blades and conical base of the bowl ensure consistent mixing. All ingredients are processed evenly and quickly thanks to a special flow generated inside the bowl. No-volt release system prevents accidental start of the appliance. All parts in contact with food are removable and Dishwasher safe. Watertight, easy to clean, flat, soft-touch buttons. Single speed 1800 rpm with on/pulse/off function for simple operations. With US plug.

APPROVAL:

Main Features

- Tabletop cutter mixer and emulsifier allowing fast chopping, mixing, mincing, griding, liquidizing and kneading.
- Bowl/lid scraper included for uniform smooth results (emulsifying) and continuous working.
- Transparent lid, with funnel shaped hole, to add ingredients during use.
- All ingredients are processed evenly and quickly thanks to a special movement generated inside the bowl.
- Easy to clean and watertight control panel with on/off button and pulse function.
- Pulse function to coarse chopping.
- All parts in contact with food are removable without the use of tools, completely dismountable and dishwasher safe.
- ErgoCert 4-star certification for ergonomic design and ease of use.
- Productivity up to 50 settings per service.
- Includes 3.8 quart stainless steel bowl with micro-toothed blades rotor.

Construction

- Transparent copolyester bowl
- Microtoothed blades in 420 AISI stainless steel and ergonomic scraper in high resistant composite material to ensure consistent mixing.
- compact design, easy to move and store.
- IPX5 (IP55) flat panel touch-control, watertight panel.
- Main switch ON/OFF on the back of the appliance.
- Asynchronous industrial motor with no brushes for high reliability and quiet functioning, stainless steel motor shaft.
- Food safety assured thanks to BPA-free materials and compliance with NSF standards.
- Product safety in accordance with international and UL standards.
- 1 speed: 1800 rpm.
- Motor power: 1 HP/ 750 Watt.

Included Accessories

- 1 of TRANSPARENT LID (WITHOUT SEALING) FOR 3,8QT CUTTER MIXER BOWL PNC 650118
- 1 of FINE SERRATED BLADE ROTOR FOR 3.8QT CUTTER MIXER PNC 650233
- 1 of STAINLESS STEEL BOWL FOR 3.8QT CUTTER MIXER PNC 650235
- 1 of SCRAPER FOR 3.8QT CUTTER BOWL PNC 650236

Optional Accessories

- TRANSPARENT LID (WITHOUT SEALING) FOR 3,8QT CUTTER MIXER BOWL PNC 650118 ❑
- FINE SERRATED BLADE ROTOR FOR 3.8QT CUTTER MIXER PNC 650233 ❑
- SMOOTH BLADE ROTOR FOR 3.8QT CUTTER MIXER PNC 650234 ❑
- STAINLESS STEEL BOWL FOR 3.8QT CUTTER MIXER PNC 650235 ❑
- SCRAPER FOR 3.8QT CUTTER BOWL PNC 650236 ❑

The company reserves the right to make modifications to the products without prior notice. All information correct at time of printing.

Food Processor
TrinityPro Cutter Mixer 3.8 qt - Single Speed - US plug

Front

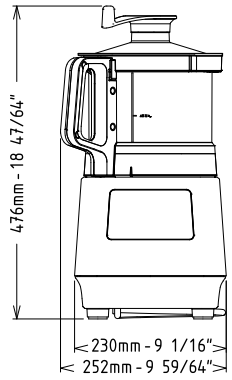

Side

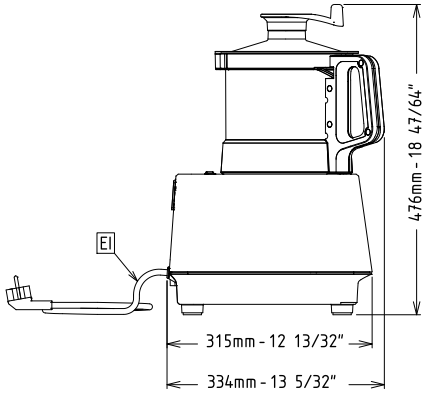

EI = Electrical connection

Top

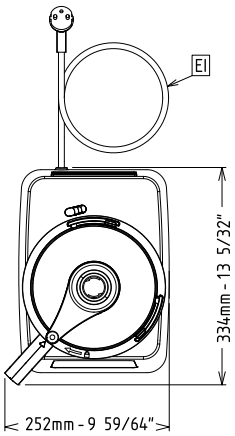

Electric

Supply voltage:	115 V/1N ph/60 Hz
Electrical power, max:	1 kW
Total Watts:	1 kW

Capacity:

Performance (up to):	0 kg/Cycle
Capacity:	3.6 Litre

Key Information:

External dimensions, Width:	252 mm
External dimensions, Depth:	334 mm
External dimensions, Height:	476 mm
Shipping weight:	19.9 kg

The company reserves the right to make modifications to the products without prior notice. All information correct at time of printing.

2026.10.16